Tutorial -2

ME-101, Division I & IV (2016-2017 Semester-II)

Jan-23, 2017 **Time: 8-00 to 8-55.am**

Q1: Determine the forces in members *BE* and *CE* of the loaded truss (using method of joints) shown in **Fig. 1**, in which $\overline{BC} = \overline{CD}$

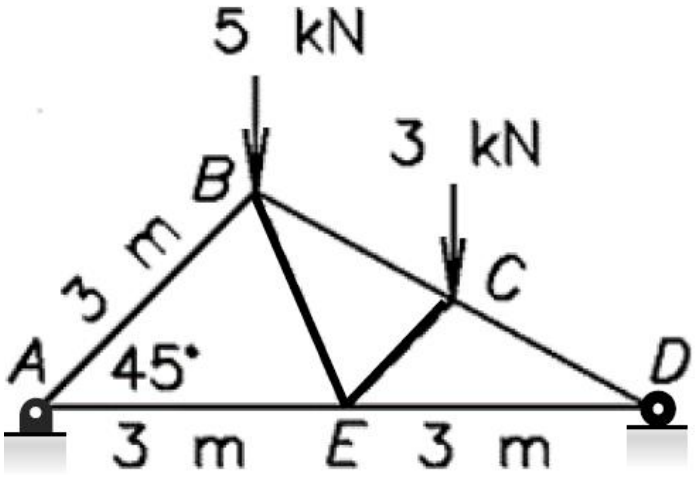

Figure 1.

Q2: In **Fig. 2**, determine the forces in members **DE** and **DL** by the method of sections.

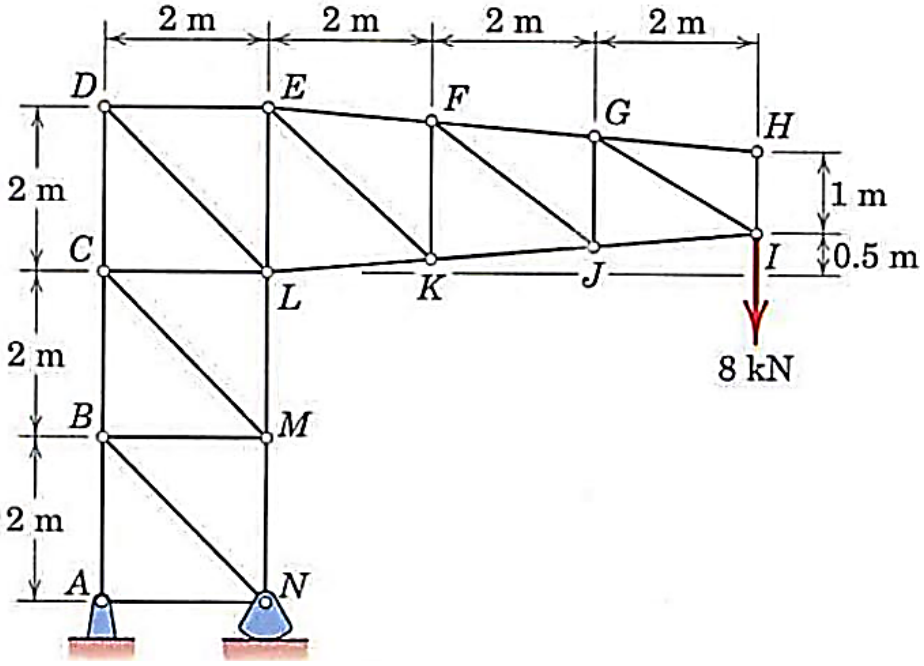

Figure. 2

Q3: Identify the zero force member(s) in the truss shown in **Fig. 3.**

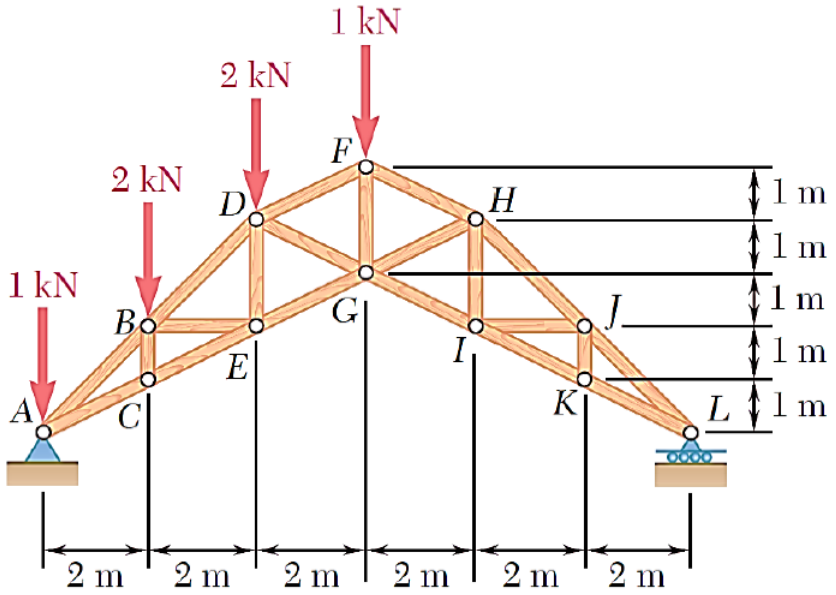

Figure 3

Q4. The open tank is fabricated from a hemisphere and cylindrical shell (**Fig. 4**). Determine the vertical reactions that each of the four symmetrically placed legs exerts on the floor if the tank contains water which is $3.66m$ deep in the tank. The specific gravity of water is $1000\ kg/\mathrm{m}^3$. Neglect the weight of the tank.

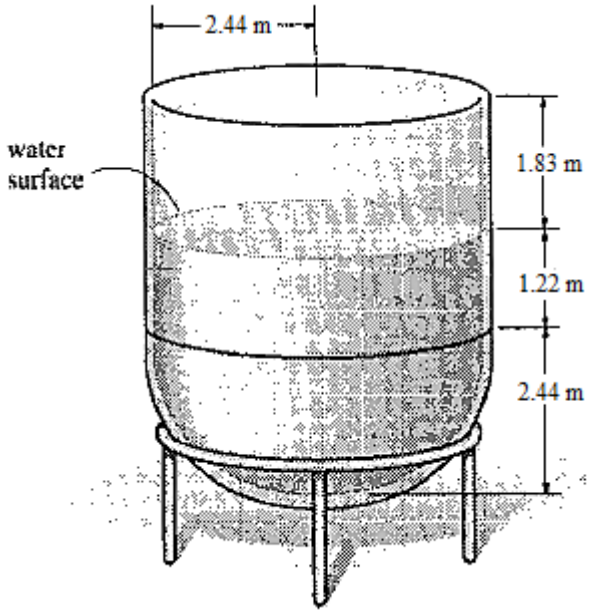

Figure. 4

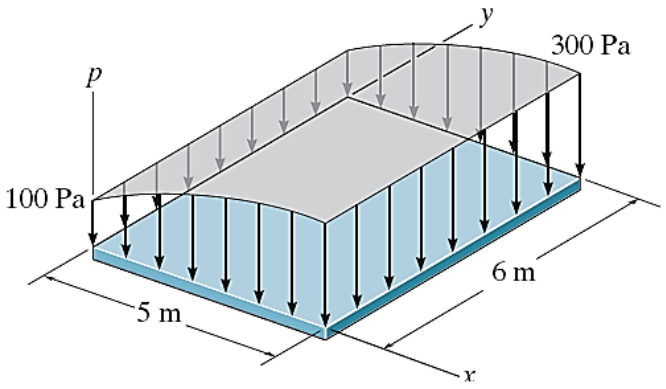

Figure. 5

Q5. The pressure loading on the plate is described by the function: $p = \frac{-240}{x+1} + 340$. Pa (**Fig. 5**). Determine the magnitude of the resultant force and coordinates of the point where the line of action of the force intersects the plate.