Virtual Displacement

Equilibrium of a Particle

Total virtual work done on the particle due to virtual displacement $\delta\mathbf{r}$:

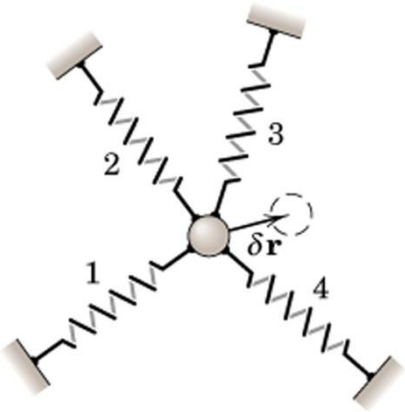

$$\delta U = \mathbf{F}_1 \cdot \delta\mathbf{r} + \mathbf{F}_2 \cdot \delta\mathbf{r} + \mathbf{F}_3 \cdot \delta\mathbf{r} + \cdots = \Sigma\mathbf{F} \cdot \delta\mathbf{r}$$

Expressing $\sum\mathbf{F}$ in terms of scalar sums and $\delta\mathbf{r}$ in terms of its component virtual displacements in the coordinate directions:

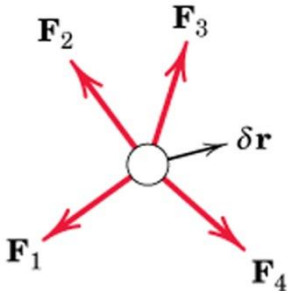

$$\delta U = \Sigma\mathbf{F} \cdot \delta\mathbf{r} = (\mathbf{i}\,\Sigma F_x + \mathbf{j}\,\Sigma F_y + \mathbf{k}\,\Sigma F_z) \cdot (\mathbf{i}\,\delta x + \mathbf{j}\,\delta y + \mathbf{k}\,\delta z)$$
$$= \Sigma F_x\,\delta x + \Sigma F_y\,\delta y + \Sigma F_z\,\delta z = 0$$

The sum is zero since $\sum\mathbf{F} = 0$, which gives $\sum F_x = 0$, $\sum F_y = 0$, $\sum F_z = 0$

Alternative Statement of the equilibrium: $\delta U = 0$

This condition of **zero virtual work** for **equilibrium** is **both necessary and sufficient** since we can apply it to the **three mutually perpendicular directions** → **3 conditions of equilibrium**

Virtual Work

***Principle of Virtual Work*:**

- If a particle is in equilibrium, the total virtual work of forces acting on the particle is zero for any virtual displacement.

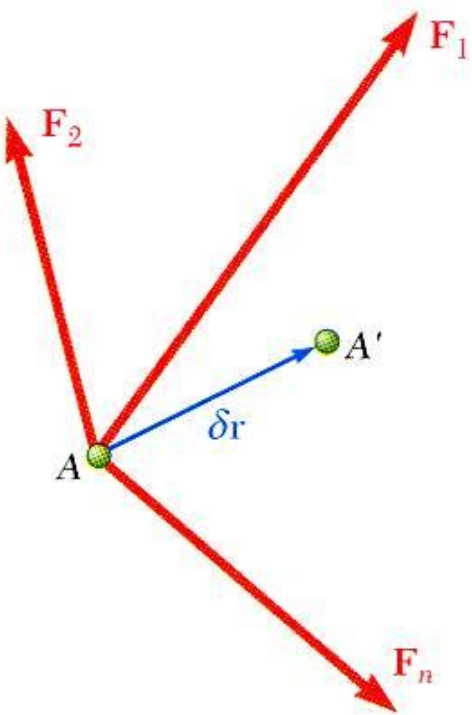

- If a rigid body is in equilibrium
  - total virtual work of external forces acting on the body is zero for any virtual displacement of the body
- If a system of connected rigid bodies remains connected during the virtual displacement
  - the work of the external forces need be considered
    - since work done by internal forces (equal, opposite, and collinear) cancels each other.

Example (1) on Virtual Work

A hydraulic-lift table is used to raise a 1000-kg crate. It consists of a platform and of two identical linkages on which hydraulic cylinders exert equal forces. (Only one linkage and one cylinder are shown.) Members *EDB* and *CG* are each of length $2a$, and member *AD* is pinned to the midpoint of *EDB*. If the crate is placed on the table, so that half of its weight is supported by the system shown, determine the force exerted by each cylinder in raising the crate for $\theta = 60°$, $a = 0.70$ m, and $L = 3.20$ m.

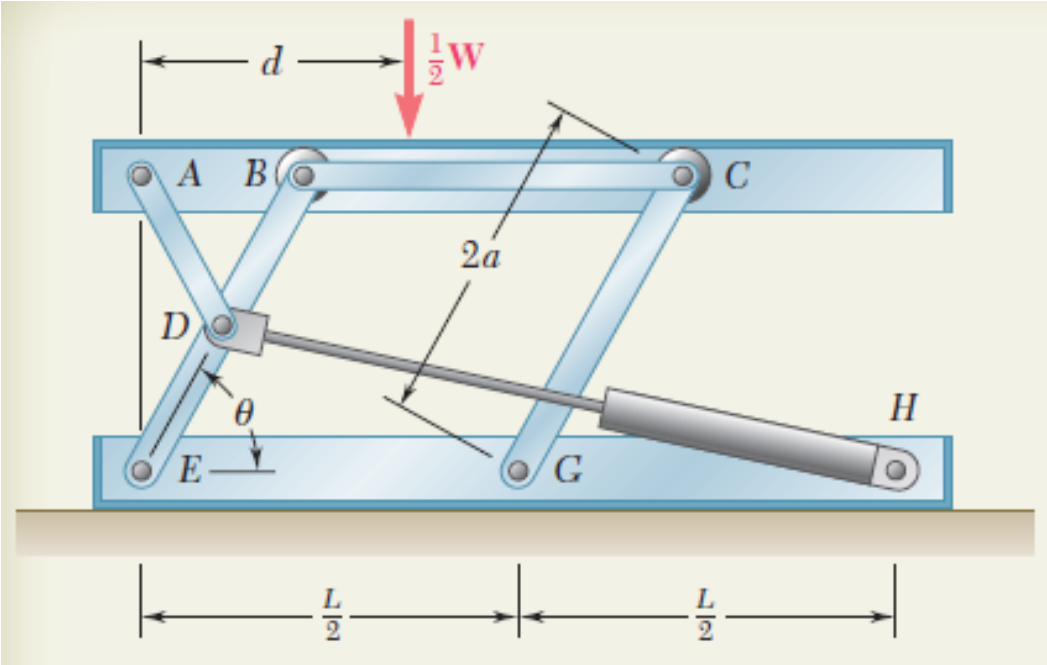

Example (1) on Virtual Work

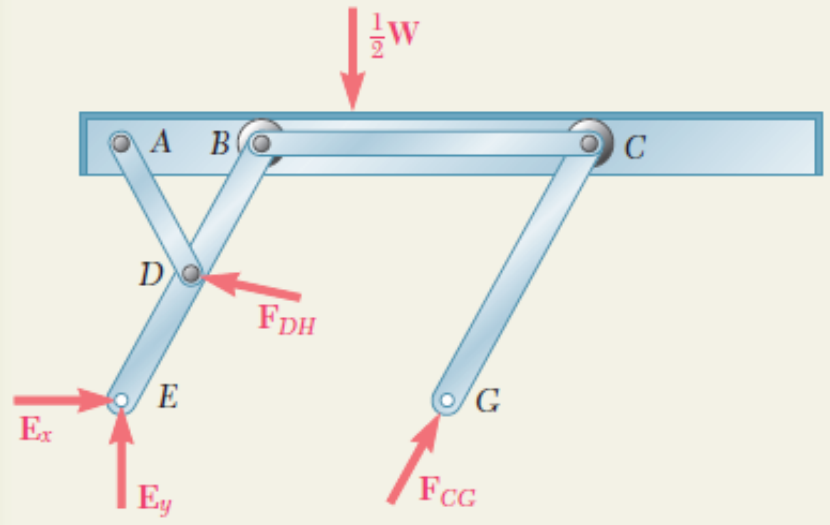

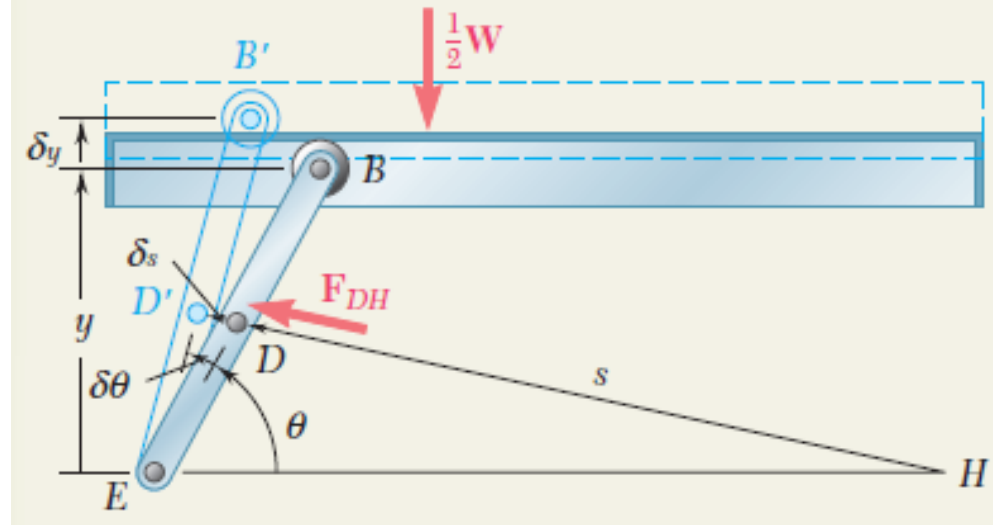

$$\delta U = 0: \qquad -\tfrac{1}{2}W\ \delta y + F_{DH}\ \delta s = 0 \qquad (1)$$

The vertical displacement δy of the platform is expressed in terms of the angular displacement $\delta\theta$ of EDB as follows:

$$y = (EB)\sin\theta = 2a\sin\theta$$
$$\delta y = 2a\cos\theta\ \delta\theta$$

Example (1) on Virtual Work

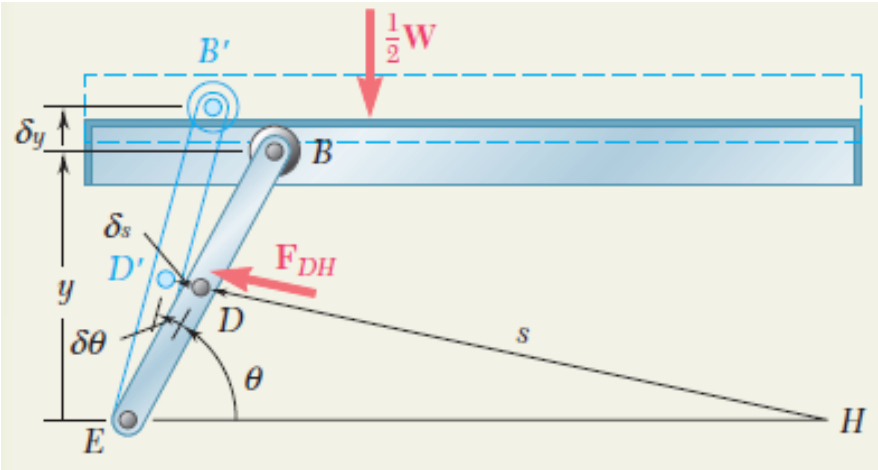

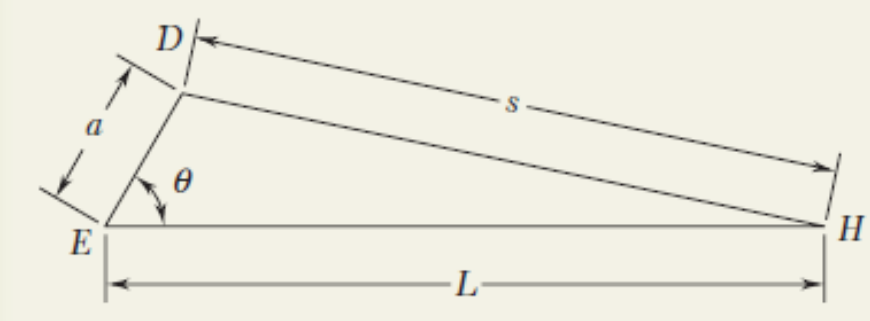

To express δs similarly in terms of $\delta\theta$, we first note that by the law of cosines,

$$s^2 = a^2 + L^2 - 2aL\cos\theta$$

Differentiating,

$$2s\,\delta s = -2aL(-\sin\theta)\,\delta\theta$$

$$\delta s = \frac{aL\sin\theta}{s}\,\delta\theta$$

Example (1) on Virtual Work

Substituting for δy and δs into (1), we write

$$(-\tfrac{1}{2}W)2a\cos\theta\,\delta\theta + F_{DH}\frac{aL\sin\theta}{s}\delta\theta = 0$$

$$F_{DH} = W\frac{s}{L}\cot\theta$$

With the given numerical data, we have

$$W = mg = (1000\text{ kg})(9.81\text{ m/s}^2) = 9810\text{ N} = 9.81\text{ kN}$$

$$s^2 = a^2 + L^2 - 2aL\cos\theta$$

$$= (0.70)^2 + (3.20)^2 - 2(0.70)(3.20)\cos 60° = 8.49$$

$$s = 2.91\text{ m}$$

$$F_{DH} = W\frac{s}{L}\cot\theta = (9.81\text{ kN})\frac{2.91\text{ m}}{3.20\text{ m}}\cot 60°$$

$$F_{DH} = 5.15\text{ kN}$$

Example (2) on Virtual Work

Each of the two uniform hinged bars has a mass m and a length l, and is supported and loaded as shown. For a given force P determine the angle θ for equilibrium.

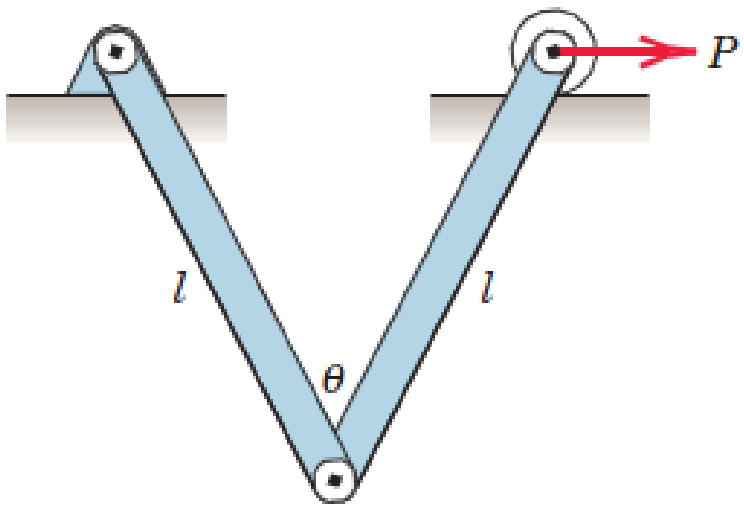

Example (2) on Virtual Work

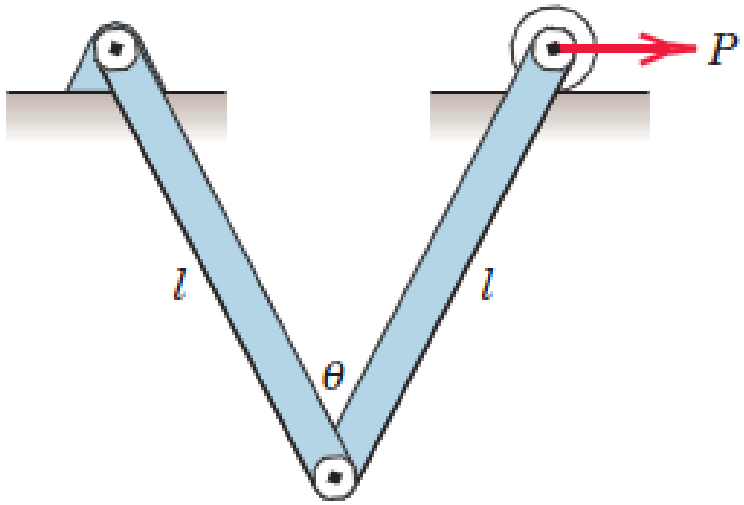

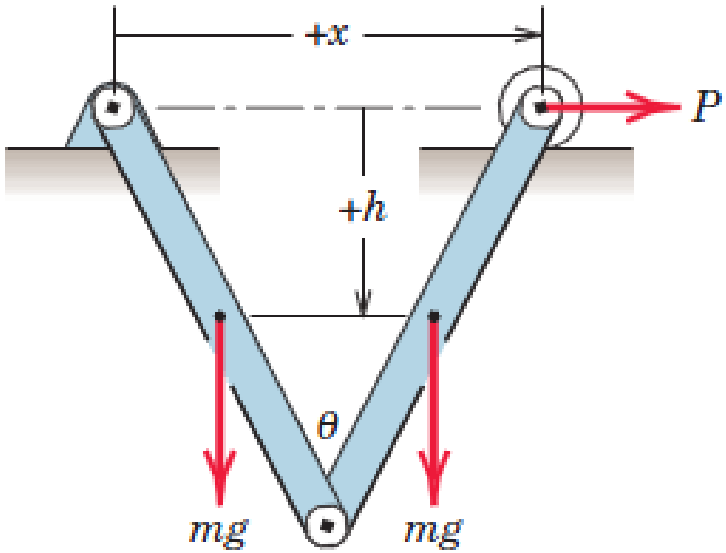

The principle of virtual work requires that the total work of all external active forces be zero for any virtual displacement consistent with the constraints. Thus, for a movement δx the virtual work becomes

$$[\delta U = 0] \qquad P\,\delta x + 2mg\,\delta h = 0$$

$$x = 2l \sin\frac{\theta}{2} \qquad \text{and} \qquad \delta x = l\cos\frac{\theta}{2}\,\delta\theta$$

Example (2) on Virtual Work

$$h = \frac{l}{2}\cos\frac{\theta}{2} \qquad \text{and} \qquad \delta h = -\frac{l}{4}\sin\frac{\theta}{2}\,\delta\theta$$

Substitution into the equation of virtual work gives us

$$Pl\cos\frac{\theta}{2}\,\delta\theta - 2mg\,\frac{l}{4}\sin\frac{\theta}{2}\,\delta\theta = 0$$

from which we get

$$\tan\frac{\theta}{2} = \frac{2P}{mg} \qquad \text{or} \qquad \theta = 2\tan^{-1}\frac{2P}{mg} \qquad \textit{Ans.}$$

Example (3) on Virtual Work

For link OA in the horizontal position shown, determine the force P on the sliding collar which will prevent OA from rotating under the action of the couple M. Neglect the mass of the moving parts.

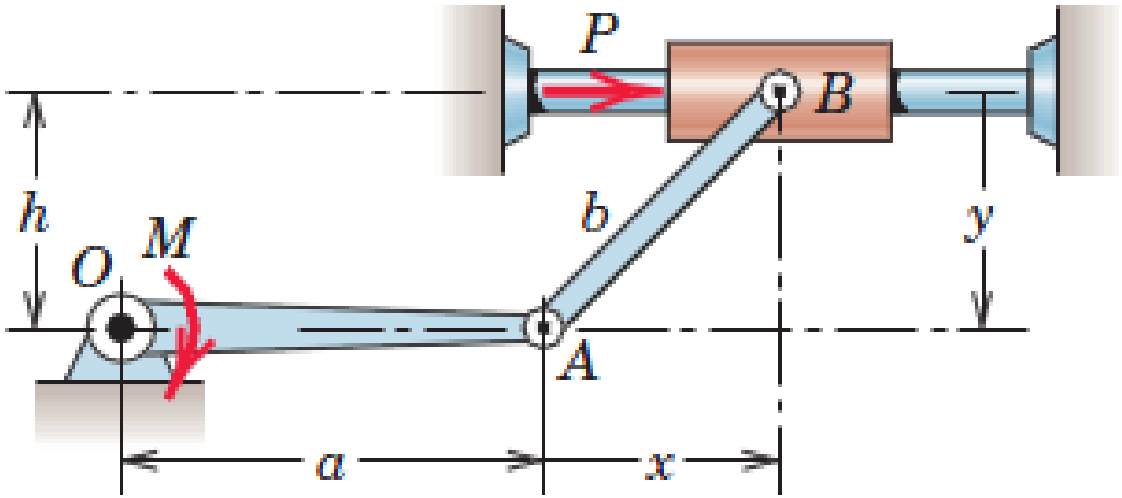

Example (3) on Virtual Work

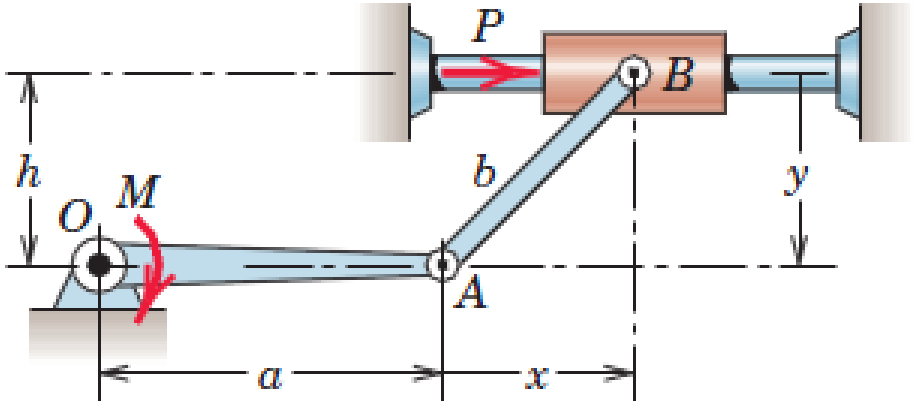

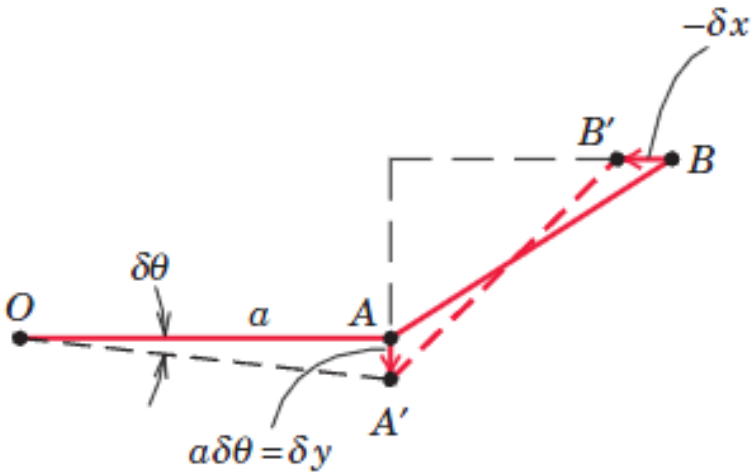

From the horizontal position of the crank, the angular movement gives a downward displacement of A equal to

$$\delta y = a\,\delta\theta$$

$$b^2 = x^2 + y^2$$

We now take the differential of the equation and get

$$0 = 2x\,\delta x + 2y\,\delta y \qquad \text{or} \qquad \delta x = -\frac{y}{x}\,\delta y$$

Example (3) on Virtual Work

$$\delta x = -\frac{y}{x}\, a\, \delta\theta$$

and the virtual-work equation becomes

$$[\delta U = 0] \qquad M\,\delta\theta + P\,\delta x = 0 \qquad M\,\delta\theta + P\left(-\frac{y}{x}\, a\, \delta\theta\right) = 0$$

$$P = \frac{Mx}{ya} = \frac{Mx}{ha} \qquad \textit{Ans.}$$

Virtual Work

Potential Energy and Stability

- Till now equilibrium configurations of mechanical systems composed of rigid members was considered for analysis using method of virtual work.

- Extending the method of virtual work to account for mechanical systems which include elastic elements in the form of springs (non-rigid elements).

- Introducing the concept of Potential Energy, which will be used for determining the stability of equilibrium.

- Work done on an elastic member is stored in the member in the form of Elastic Potential Energy V_e.
    - This energy is potentially available to do work on some other body during the relief of its compression or extension.

Virtual Work

Elastic Potential Energy (V_e)

Consider a **linear and elastic** spring compressed by a force $F \rightarrow F = kx$
k = spring constant or stiffness of the spring

Work done on the spring by F during a movement dx: $dU = F\,dx$

Elastic potential energy of the spring for compression x = total work done on the spring

$$V_e = \int_0^x F\,dx = \int_0^x kx\,dx$$

$$\boxed{V_e = \tfrac{1}{2}kx^2}$$

→ Potential Energy of the spring = area of the triangle in the diagram of F versus x from 0 to x

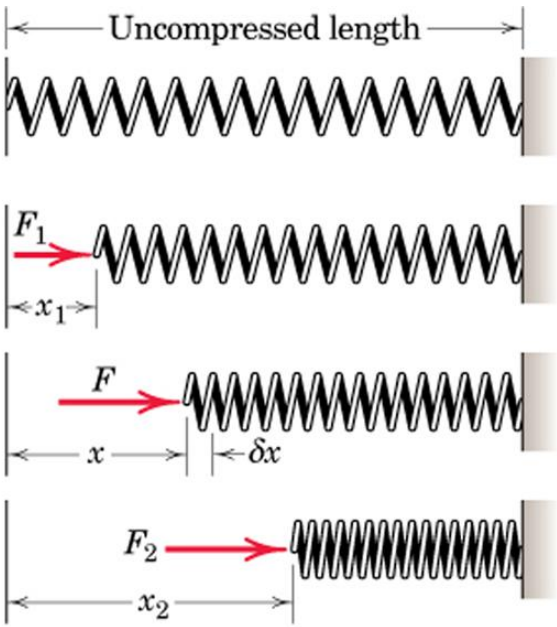

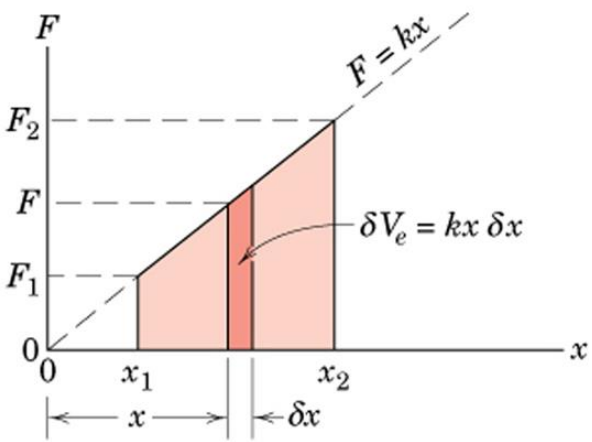

Virtual Work

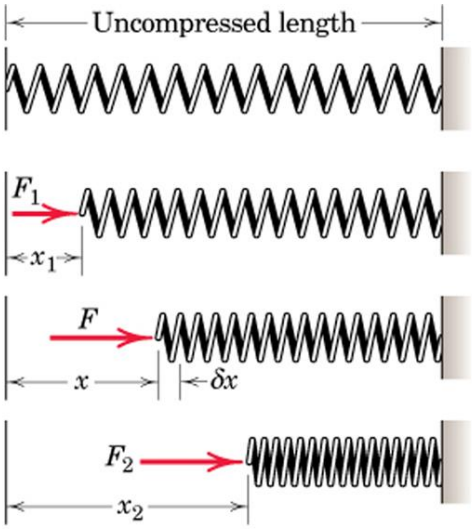

Elastic Potential Energy

During increase in compression from x_1 to x_2:
Work done on the springs = change in V_e

$$\Delta V_e = \int_{x_1}^{x_2} kx\, dx = \tfrac{1}{2}k(x_2{}^2 - x_1{}^2)$$

→ Area of trapezoid from x_1 to x_2

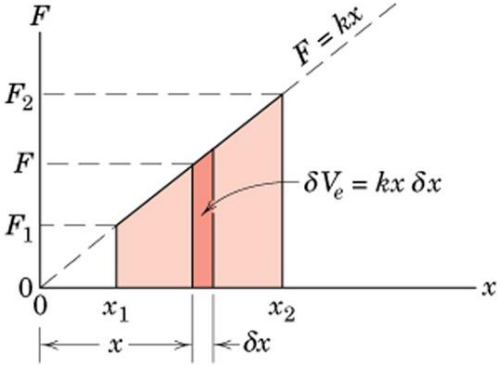

During a virtual displacement δx of the spring: virtual work done on the spring = virtual change in elastic potential energy

$$\delta V_e = F\,\delta x = kx\,\delta x$$

During the decrease in compression of the spring as it is relaxed from $x=x_2$ to $x=x_1$, the change (final minus initial) in the potential energy of the spring is negative
→ If δx is negative, δV_e is negative

When the spring is being stretched, the force acts in the direction of the displacement → Positive Work on the spring → Increase in the Potential Energy

Virtual Work

Elastic Potential Energy

Work done by the linear spring on the body to which the spring is attached (during displacement of the spring) is the negative of the change in the elastic potential energy of the spring (due to equilibrium).

Torsional Spring: resists the rotation

K = Torsional Stiffness (torque per radian of twist)

θ = angle of twist in radians

Resisting torque, $M = K\theta$

The Potential Energy: $V_e = \int_0^\theta K\theta \, d\theta$ → $\boxed{V_e = \frac{1}{2}K\theta^2}$

This is similar to the expression for the linear extension spring

Units of Elastic Potential Energy → Joules (J)
(same as those of Work)

Virtual Work

Gravitational Potential Energy (V_g)

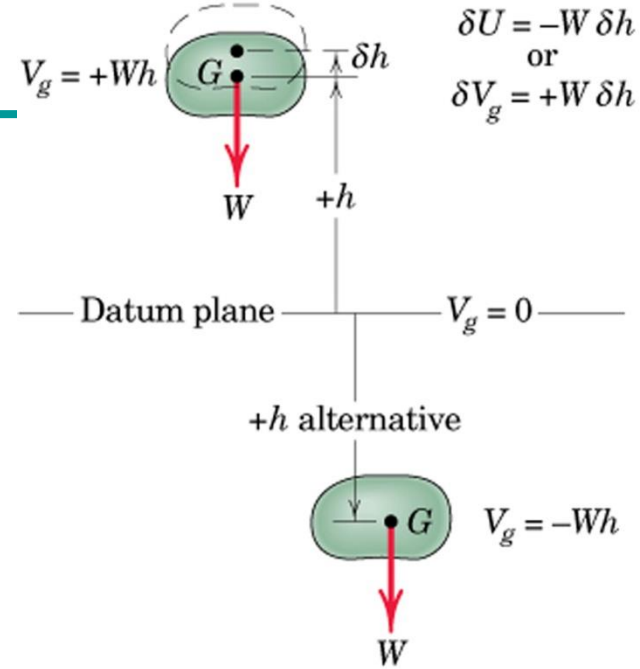

Treatment of Gravitational force till now:
For an upward displacement δh of the body, work done by the weight (W=mg) is: $\delta U = -mg\delta h$
For downward displacement (with h measured positive downward): $\delta U = mg\delta h$

Alternatively, work done by gravity can be expressed in terms of a change in potential energy of the body.
The Gravitational Potential Energy of a body is defined as the work done on the body by a force **equal and opposite to the weight** in bringing the body to the position under consideration from some arbitrary datum plane where the potential energy is defined to be zero. → V_g is negative of the work done by the weight.

V_g =0 at h=0
→ at height h above the datum plane, V_g of the body = mgh
→ If the body is at distance h below the datum plane, V_g of the body = $-mgh$

Virtual change in the gravitational potential energy: $\delta V_g = +mg\delta h$
δh is the upward virtual displacement of the mass centre of the body
If mass centre has downward virtual displacement → $\delta V_g = -mg\delta h$

Virtual Work

Gravitational Potential Energy (V_g)

Datum Plane for zero potential energy is arbitrary

- because only the change in potential energy matters
- the change remains the same irrespective of location of datum plane

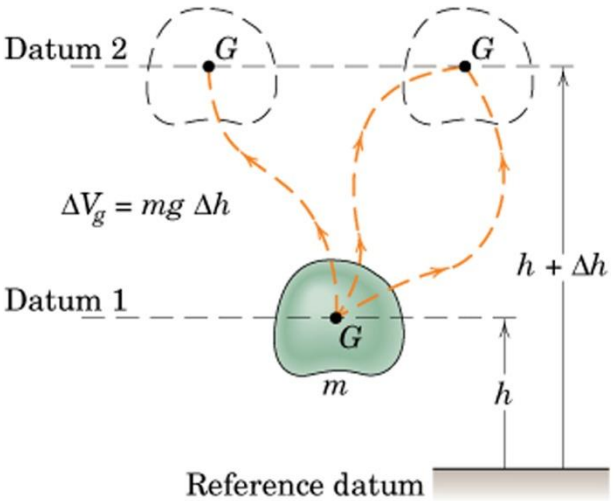

V_g is also independent of the path followed in arriving at a particular level h.

- The body of mass m has same potential energy change in going from datum 1 to datum 2 (3 possible paths) because δh remains the same for all three paths.

Units of V_g are the same as those for the work and elastic potential energy: Joules (J)

Virtual Work

Energy Equation

Work done by the linear spring on the body to which the spring is attached (during displacement of the spring) is the negative of the change in the elastic potential energy of the spring.

Work done by the gravitational force or weight mg is the negative of the change in gravitational potential energy

Virtual Work eqn to a system with springs and with changes in the vertical position of its members → replace the work of the springs and the work of the weights by negative of the respective potential energy changes

Total Virtual Work δU = work done by all active forces ($\delta U'$) other than spring forces and weight forces + the work done by the spring forces and weight forces, i.e., -($\delta V_e + \delta V_g$)

$$\delta U' - (\delta V_e + \delta V_g) = 0 \quad \text{or} \quad \delta U' = \delta V$$

$V = V_e + V_g$ → Total Potential Energy of the system

Virtual Work

Active Force Diagrams: Use of two equations

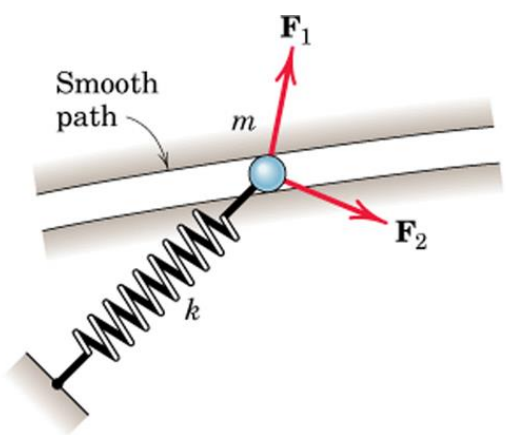

$\delta U = 0$

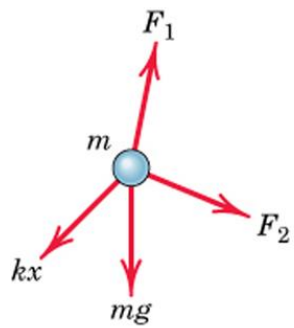

$$\delta U' - (\delta V_e + \delta V_g) = 0$$

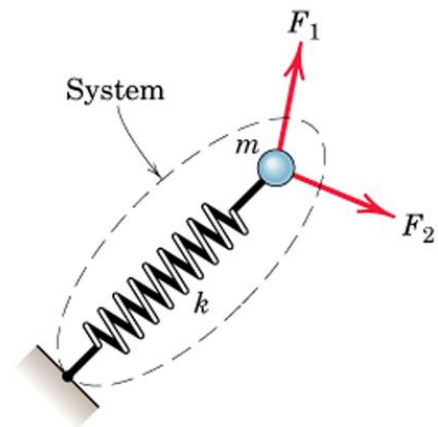

Restating the Principle of Virtual Work for a mechanical system with elastic members and members that undergo changes in position:

Virtual work done by all external active forces (other than the gravitational and spring forces accounted for in the potential energy terms) on a mechanical system in equilibrium = the corresponding change in the total elastic and gravitational potential energy of the system for any and all virtual displacements consistent with the constraints